2006 SERGEANT MAJOR PROMOTION BOARD BRIEFING

"NOTHING HAPPENS UNTIL SOMETHING MOVES"

UNITED STATES ARMY TRANSPORTATION CENTER
Fort Eustis, Virginia 23604

CMF 88 CAREER PATTERN

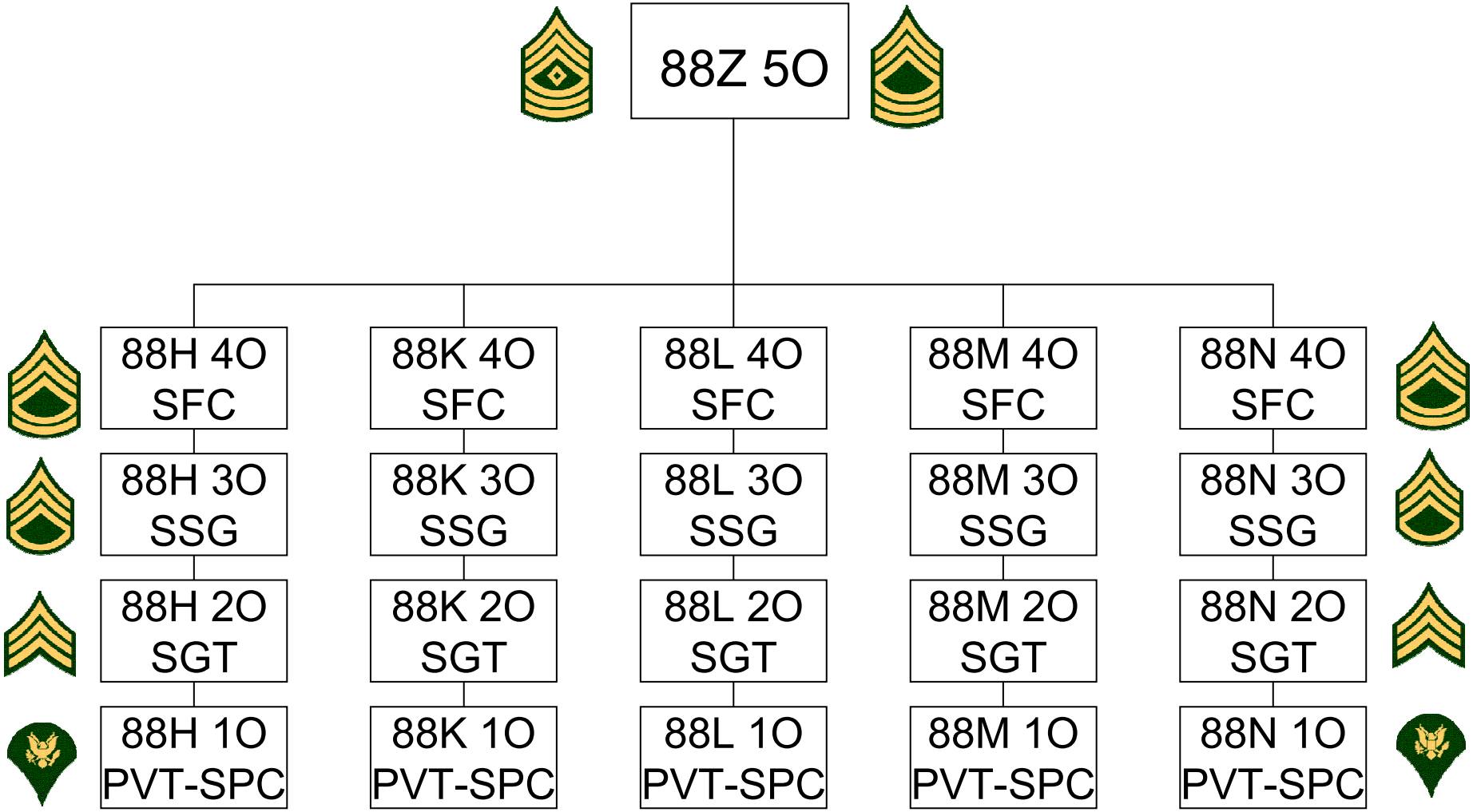

CMF 88 GENERAL INFORMATION

CMF CHARACTERISTICS

CMF 88 is a very unique and highly deployable CMF that consists of five military occupational specialties that engulf a broad spectrum of transportation operations, which include 88M (Motor Transport Operations), 88N (Transportation Management), 88H (Cargo and Terminal Operations), 88K (Army Watercraft Operations), and 88L (Army Watercraft Maintenance).

CMF MISSION

The Transportation Corps provides Army transportation services essential for the CONUS-based and forward-deployed power projection forces in support of the National Military Strategy. The Transportation Corps is responsible for the worldwide movement of units, personnel, equipment and supplies. Transportation Corps Noncommissioned Officers (NCOs) assist in the planning, staffing, directing, supervising and execution of Army and DoD transportation operations at the tactical, operational and strategic levels of war to include joint operations and operations other-than-war.

88H
(CARGO SPECIALIST)

GRADE	TITLE	DESCRIPTION
E7	Detachment Sergeant Platoon Sergeant Operations Sergeant Cargo Operations NCO	The **Detachment Sergeant** is accountable to the Detachment Commander and performs duties similar to a 1SG. The **Platoon Sergeant** is accountable to a Platoon Leader and is responsible for 75 Soldiers to include supervision of platoon operations. In the Cargo Transfer Company, the Platoon Sergeant's duties mirror those of the Detachment Sergeant. The **Operations Sergeant or Cargo Operations NCO** is accountable to the Operations Officer and supervises 5-10 Soldiers and terminal service functions in a S2/3 Battalion or SDDC Terminal Operations staff.
E6	Section Chief / Sergeant Hatch Foreman	The **Section Chief** is responsible to the Platoon SGT and supervises 45 section Soldiers that consist of 2-3 hatch gangs in a terminal transfer platoon. The **Hatch Foreman** is accountable to the Section Chief for the conduct, discipline and direct supervision of 15 hatch section Soldiers.
E5	Hatch Foreman Senior Forklift Operator Senior Crane Operator	The **Hatch Foreman** is accountable to the Section Chief for the conduct, discipline and direct supervision of 5-15 hatch section Soldiers. The **Senior Forklift or Crane Operator** supervises operation and maintenance of cargo handling equipment and enforces safety practices and documentation procedures.
E1-E4	Cargo Specialist Crane/Forklift Operator	The **Cargo Specialist or Crane or Forklift Operator** leads, directs, or performs duties that move cargo to and from all modes of transport (water, land and air). Must be proficient in all methods of cargo handling and storage procedures (manual or mechanical).

TOTAL POPULATION: 1,640

TC HIGH-RISK/CHALLENGING ASSIGNMENTS	ARMY HIGH RISK/CHALLENGING ASSIGNMENTS
DETACHMENT / PLATOON SERGEANT	DRILL SERGEANT
OPERATIONS SERGEANT	RECRUITER/STATION CDR
SECTION SERGEANT / CARGO FOREMAN	OBSERVER CONTROLLER
INSTRUCTOR / WRITER	EO, IG, JOINT DUTY
	RESERVE COMPONENT ADVISOR

ASI	P5, 2B, 2S, 4A, 5W, 6T, 8P
SQI	B, L, M, N, P, X, 8
TDA	30%
TOE	70%
INSTRUCTOR	10% (13 Positions)
DS	10% (8 Positions)
RECRUITER	5% (7 Positions)

88K
(WATERCRAFT OPERATOR)

GRADE	TITLE	DESCRIPTION
E7	Detachment Sergeant Harbormaster Marine Operations NCO First Mate	The **Detachment Sergeant** is accountable to the Detachment Commander and performs duties similar to a 1SG. The **Harbormaster** is accountable to an Operations Officer and supervises port operations on an installation. The **Marine Operations NCO** is accountable to an Operations Officer and supervises company operations for a Watercraft Company. The **First Mate** is accountable to the Vessel Master and supervises safe operation, deck maintenance, and welfare of the craft, crew, passengers and cargo on a large vessel.
E6	Boatswain	The **Boatswain** serves as the assistant First Mate and is accountable to the First Mate to ensure the safe operation, deck maintenance, and welfare of the craft, crew, passengers and cargo on a large vessel.
E5	Coxswain Leading Seaman	The **Coxswain** serves as the Vessel Master on a medium vessel and is responsible to the Commander to ensure the safe operation, maintenance and welfare of the craft, crew, passengers and cargo. The **Leading Seaman** supervises seaman in seamanship duties and is accountable the Boatswain on a large vessel.
E1-E4	Seaman Watercraft Operator	The **Seaman or Watercraft Operator** performs seamanship duties on Army watercraft and amphibians, which include the use of electronic navigation equipment, navigational aids, military and commercial radios, and single-letter international code flags. Watercraft operators and seaman also receive extensive training in damage control, firefighting, rescue procedures.

TOTAL POPULATION: 493

TC HIGH-RISK/CHALLENGING ASSIGNMENTS	ARMY HIGH RISK/CHALLENGING ASSIGNMENTS
DETACHMENT SGT / HARBORMASTER	DRILL SERGEANT
MARINE OPERATIONS NCO	RESERVE COMPONENT ADVISOR
FIRST MATE / COXSWAIN	OBSERVER CONTROLLER
CAREER ADVISOR	RECRUITER / STATION CDR
INSTRUCTOR / WRITER	EO, IG, JOINT DUTY

ASI	P5, 2B, 2S, 4A, 5W, 6T, 8P
SQI	B, L, M, N, P, X, 8
TDA	11%
TOE	89%
INSTRUCTOR	<1% (7 Positions)
DS	0% (None)
RECRUITER	1% (7 Positions)

88L
(WATERCRAFT ENGINEER)

GRADE	TITLE	DESCRIPTION
E7	Detachment Sergeant Marine Maintenance Supervisor Marine Maintenance NCO Assistant Marine Engineer	The **Detachment Sergeant** is accountable to the Detachment Commander and performs duties similar to a 1SG. The **Marine Maintenance Supervisor** is accountable to the Maintenance Officer and is responsible for maintenance operations on MACOM staffs. The **Marine Maintenance NCO** is accountable to the Vessel Master and supervises 2-6 Soldiers and all maintenance operations on a medium vessel. The **Assistant Marine Engineer** is accountable to the Chief Engineer and supervises 5-36 Soldiers to include all hands-on maintenance activities on large vessels.
E6	Marine Maintenance SGT Asst. Marine Maintenance SGT Junior Marine Engineer	The **Marine Maintenance SGT** is accountable to the Maintenance Officer and is responsible for maintenance operations on Group-level staffs and below. The **Assistant Marine Maintenance SGT** is accountable to the Maintenance Supervisor and supervises 2-6 Soldiers and all maintenance operations on a medium vessel. The **Junior Marine Engineer** is accountable to the Marine Maintenance Supervisor and supervises 2-6 Soldiers to include all maintenance activities on large or medium vessels.
E5	Chief Engineer Senior Marine Engineman	The **Chief Engineer** is accountable to the Coxswain and supervises 3 Soldiers and all maintenance operations on a small vessel. The **Senior Marine Engineman** supervises 1-3 Soldiers and performs maintenance functions on vessels and amphibians.
E1-E4	Marine Engineman	The **Marine Engineman** operates and maintains the vessel's engines, power plants and support systems to include general vessel upkeep.

TOTAL POPULATION: 339

TC HIGH-RISK/CHALLENGING ASSIGNMENTS	ARMY HIGH RISK/CHALLENGING ASSIGNMENTS
DETACHMENT / PLATOON SERGEANT	DRILL SERGEANT
MARINE MAINTENANCE SUPERVISOR	RESERVE COMPONENT ADVISOR
ASSISTANT MARINE ENGINEER	OBSERVER CONTROLLER
CAREER ADVISOR	RECRUITER / STATION CDR
INSTRUCTOR / WRITER	EO, IG, JOINT DUTY

ASI	P5, 2B, 2S, 4A, 5W, 6T, 8P
SQI	B, L, M, N, P, X, 8
TDA	17%
TOE	83%
INSTRUCTOR	<1% (5 Positions)
DS	0% (None)
RECRUITER	1% (3 Positions)

88M
(MOTOR TRANSPORT OPERATOR)

GRADE	TITLE	DESCRIPTION
E7	Detachment Sergeant Truckmaster Operations SGT Platoon Sergeant Master Driver (DA Level)	The **Detachment Sergeant** is accountable to the Detachment Commander and performs duties similar to a 1SG. The **Operations Sergeant, Fleet Management NCO** and **Truckmaster** is accountable to the Operations Officer and supervises all truck commitments and motor pool operations at their respective levels of command. The **Platoon Sergeant** is accountable to the Platoon Leader and is responsible for 30-48 Soldiers, equipment and platoon operations. The **Master Driver (SFC)** is responsible for transportation of 4-star level flag officers and above to include the **President and his staff**.
E6	Assistant Truckmaster Squad Leader Section Sergeant Senior Driver (MACOM)	Due to company sizes of 150+ vehicles, the **Assistant Truckmaster** is accountable to the Truckmaster and performs similar duties, The **Section Sergeant or Squad Leader** is accountable to the Platoon Sergeant and supervises 10-12 Soldiers and squad vehicle operations. The **Senior Driver (SSG)** is responsible for transportation of 1/2-star level flag officers.
E5	Dispatcher Heavy Vehicle Driver Driver	The **Dispatcher** is accountable to the Truckmaster or Assistant and manages and controls vehicle dispatch operations and records management. The **Heavy Vehicle Driver** operates complex heavy transporters and supervises subordinate operators. The **Driver (SGT)** is responsible for transportation of COL/BG level officers.
E1-E4	Driver	The **Driver** performs numerous leadership and technical functions for the safe operation of wheeled vehicles in support of personnel, cargo and equipment movements.

TOTAL POPULATION: 11, 711

TC HIGH-RISK/CHALLENGING ASSIGNMENTS	ARMY HIGH RISK/CHALLENGING ASSIGNMENTS
DETACHMENT SERGEANT / TRUCKMASTER/PLATOON SERGEANT	DRILL SERGEANT
OPERATIONS SERGEANT	RECRUITER / STATION CDR
INSTRUCTOR / WRITER	OBSERVER CONTROLLER
WHITE HOUSE MOTORPOOL	EO, IG, JOINT DUTY
	RESERVE COMPONENT ADVISOR

ASI	P5, 2B, 2S, 4A, 5W, 6T, 8P
SQI	B, L, M, N, P, X, 8
TDA	25%
TOE	75%
INSTRUCTOR	78% (113 Positions)
DS	77% (61 Positions)
RECRUITER	70% (99 Positions)

88N
(TRANSPORTATION MANAGEMENT SPECIALIST)

GRADE	TITLE	DESCRIPTION
E7	Detachment Sergeant Operations SGT Chief Movements Supervisor Senior Movements NCO Trans Logistics NCO	The **Detachment Sergeant** is accountable to the Detachment Commander and performs duties similar to a 1SG. The **Operations Sergeant, Chief or Senior Movements Supervisor, and Trans Logistics NCO** is accountable to a Detachment Commander or Branch or Division-level Operations Officer and supervises 10-20 subordinate personnel, transportation operations, and transportation management operations at Detachment Command-level units through MACOM staff-level organizations.
E6	Movements Supervisor Trans Mgt Supervisor Documentation Supervisor Movements NCO Training NCO	The **Movements or Transportation Management Supervisor, Movements NCO,** or **Documentation Supervisor** is accountable to a Senior/Chief Movements Supervisor or Operations Officer and supervises 5-10 subordinate personnel and transportation management and documentation operations at section level of Battalion through MACOM staff level organizations. The **Training NCO** is accountable to the Training Officer and manages and trains transportation systems in joint commands.
E5	Trans Management NCO Movements NCO Movements Specialist	The **Transportation Management or Movements NCO and Movements Specialist** supervises 1-5 Soldiers and oversees preparation of transportation documents; receives, reviews and processes transportation requests for cargo shipments and unit moves using all modes of transport.
E1-E4	Transportation Management Coordinator	The **Transportation Management Coordinator** performs numerous leadership and technical functions for the safe operation of wheeled vehicles in support of personnel, cargo, and equipment movements.

TOTAL POPULATION: 1, 712

TC HIGH-RISK/CHALLENGING ASSIGNMENTS	ARMY HIGH RISK/CHALLENGING ASSIGNMENTS
DETACHMENT / OPERATIONS SERGEANT	DRILL SERGEANT
SENIOR / CHIEF MOVEMENTS SUPERVISOR	RECRUITER / STATION CDR
TRANSPORTATION LOGISTICS NCO	OBSERVER CONTROLLER
INSTRUCTOR / WRITER	EO, IG, JOINT DUTY
	RESERVE COMPONENT ADVISOR

ASI	P5, 2B, 2S, 4A, 5W, 6T, 8P
SQI	B, L, M, N, P, X, 8
TDA	22%
TOE	78%
INSTRUCTOR	8% (11 Positions)
DS	8% (6 Positions)
RECRUITER	10% (15 Positions)

88Z
(SENIOR TRANSPORTATION SERGEANT)

GRADE	TITLE	DESCRIPTION
E8 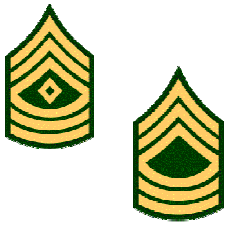	First Sergeant Operations Sergeant Transportation Supervisor Marine Maintenance Sergeant	The **First Sergeant** is accountable to the Company Commander and performs principle NCO duties associated with ASI "M." The **Operations Sergeant or Transportation Supervisor** is accountable to a Senior (field grade) Operations Officer at Division-level staff organizations and supervises 10-50 personnel and transportation operations at Battalion through MACOM level commands. The **Marine Maintenance Sergeant** is accountable to the Senior Supply Operations Officer and is responsible for marine maintenance operations at theater level commands.

TOTAL POPULATION: 218

TC HIGH-RISK/CHALLENGING ASSIGNMENTS	ARMY HIGH RISK/CHALLENGING ASSIGNMENTS
FIRST SERGEANT / TRANSPORTATION SUPV.	RESERVE COMPONENT ADVISOR
OPERATIONS SERGEANT	OBSERVER CONTROLLER
MARINE MAINTENANCE SERGEANT	EO, IG, JOINT DUTY
CAREER ADVISOR	
INSTRUCTOR / WRITER	

ASI	P5, 2B, 2S, 4A, 5W, 6T
SQI	B, L, M, N, P, X, 8
TDA	33%
TOE	67%
SENIOR INSTRUCTOR	<1% (2 Positions)
DS	N/A
RECRUITER	N/A

EDUCATION

MILITARY EDUCATION

- PLDC
- BNCOC
- ANCOC
- Battle Staff Course
- Equal Opportunity Course
- First Sergeant Course

CIVILIAN EDUCATION

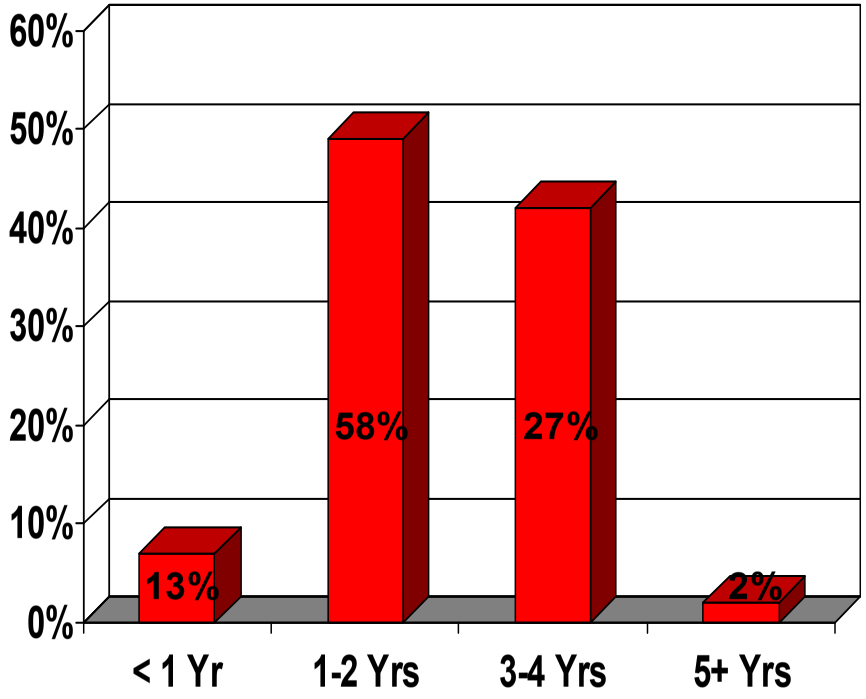

Percentage is of all MSGs in this MOS considered for promotion during the CY04 MSG Selection Board

NOTE: A college education is desirable and indicates initiative and potential; however, it is not a requirement for promotion MSG.

UNIQUE MOS CHARACTERISTICS

TOE VS. TDA ASSIGNMENTS

- Most of the Transportation Corps enlisted positions are in TO&E units or assignments. Thus, the majority of a Soldier's assignments should reflect this trend.

- During FY04/05, several TC SGM positions were converted due to Modularity. As a result, several TC NCOs remained in excess positions until attrition or PCS. Personnel that fall in this category should not be penalized as this initiative was directed IAW the Army Campaign Plan.

SPECIAL MOS CONSIDERATIONS

- **Assignment Opportunities:** Assignment opportunities for 88Hs, 88Ks and 88L are geographically limited. The majority of positions are located at Fort Eustis and Fort Story, VA. Therefore, opportunity for worldwide assignment in these career fields is severely limited.

- **Watercraft Qualifications:** In order to be MOS qualified, 88K and 88L Soldiers must pass a written test per International Maritime Regulations, United States Code, and Army Regulations for each skill level.

- **Leadership Opportunities:** There are very limited leadership opportunities for 88N, 88K, and 88L specialties and many Soldiers are not always afforded the opportunity to serve in typical Army leadership positions. However, most assignments in these fields involve leadership and troop responsibility, which cannot be reflected in the job/position title due to TDA and MTO&E titles. It's imperative to ***read the additional duty block on the NCOER.***

CMF 88 CAREER MAP

Reference DA PAM 600-25 Chapter 29

RANK					
88H	Cargo Checker/Handler Forklift Operator Crane Operator	Hatch Forman Section Chief Unit Movement Officer	Section Sergeant Unit Movement Officer Assistant Operations Sergeant Hatch Foreman	Platoon Sergeant Operations Sergeant Detachment Sergeant Cargo Gear Equipment Foreman	88Z50 Senior Transportation Sergeant
88K	Seaman	Watercraft NCO Boatswain Squad Leader Coxswain Leading Seaman	Boatswain Operations Sergeant Section Sergeant Watercraft NCO	Platoon Sergeant Harbor Master Operations Sergeant 1st Mate "A" Vessel Detachment Sergeant	
88L	Marine Engineman	Squad Leader Chief Engineer "B" Vessel Senior Marine Engineman	Marine Maintenance Sergeant Assistant Marine Maintenance SGT Assistant Platoon Sergeant Junior Marine Engineer	Platoon Sergeant Detachment Sergeant Marine Maintenance NCO	
88M	HET Vehicle Driver Couriers Heavy Vehicle Driver	Dispatcher Vehicle Driver Chauffeur HET Driver Couriers Heavy Vehicle Driver	Assistant Truckmaster Section Sergeant Squad Leader Chauffeur Driver-Testing Sergeant	Truckmaster Senior Courier Platoon Sergeant Chauffeur Detachment Sergeant Operations Sergeant Highway Operations Sergeant Fleet Management NCO	First Sergeant Career Management NCO Career Advisor Operations Sergeant Transportation Supervisor Plans NCO Marine Maintenance Sergeant
88N	Trans Management Coordinator Movement Specialist	Trans Ship/Inspector Transportation Management NCO Movements NCO	Document Supervisor Movements Supervisor Trans Management Supervisor	Detachment Sergeant Operations Sergeant Transportation Logistics NCO Staff Movements NCO Senior Movements NCO Chief Movements Supervisor	
Years of Service	**1-3**	**4-6**	**7-9**	**10-15**	**16-19**
Encouraged Assignments		**Recruiter** **Instructor** **Small Group Leader**	**Drill SGT** **Operations Sergeant** **Equal Opportunity Advisor**	**Project Warrior**	**Reserve Component Advisor**
Military Schools		**PLDC** **BNCOC**	**ANCOC** **Equal Opportunity Course**	**Battle Staff Course**	**1SGs Course**
Civilian Schools	**High School/GED**	**1 Year of College**	**2 Years of College**	**3 Years of College**	**4 Years of College**

RECOGNITION OR AWARDS

Sergeant Audie Murphy Club Member

Sergeant Morales Club Member

Transportation Regimental NCO of the Year

Military Order of Saint Christopher Award

PROMOTION POTENTIAL INDICATORS

- Received strong NCOERs reflecting outstanding duty performance and potential in a variety of challenging assignments

- Exceeded NCOES, Battle Staff or First Sergeant course standards (Honor Graduate, Commandant's List, etc…)

- Maintained high physical fitness standards and consistent compliance with height and weight standards

- Consistently sought education through military courses and civilian educational opportunities while performing duties worldwide.

- Demonstrated high standards of conduct and adherence to Army values on and off duty

- Demonstrated exceptional duty performance while assigned as First Sergeant, Detachment or Operations Sergeant in a deployed or deployable unit

REFERENCE SHEET

Additional Skill Identifiers

P5	MASTER FITNESS TRAINER
2B	AIR ASSAULT
2S	BATTLE STAFF
4A	RECLASSIFICATION TRAINING
5W	JUMPMASTER
6T	MILITARY AUDITOR
8P	COMPETITIVE PARACHUTIST

Special Qualification Identifiers

B	INSPECTOR GENERAL NCO
L	LINGUIST
M	FIRST SERGEANT
N	JOINT PLANNER
P	PARACHUTIST
X	DRILL SERGEANT
8	INSTRUCTOR

Army Watercraft Characteristics

TYPE VESSEL	VESSEL CLASS	DESCRIPTION
Large	A	Self-propelled vessels that measure 65-275 feet in length. The crew lives aboard the vessel. The smallest category “A” vessel is the Small Tug (ST), which has a crew of 12 Soldiers. The largest Class “A” is the Logistics Support vessel (LSV), which has a crew of 32 Soldiers.
Medium	B	Self-propelled vessel and measures up to 65 feet in length. This vessel does not have crew quarters or mess facilities aboard the vessel. The largest Class “B” vessel is the Landing Craft Mechanized (LCM).
Small	C	Consists of floating equipment that is not self-propelled such as barges, floating cranes, machine shop, and causeway or ferry systems.

CONTACT INFORMATION

Transportation Corps Regimental CSM
CSM C.C. Jenkins, Jr.
DSN 826-2398/4173
CC.Jenkins@eustis.army.mil

Transportation Corps Proponency SGM
SGM Clifford McMillan
DSN 826-3672
Victor.Harper@eustis.army.mil

Fort Eustis Operator
DSN 826-5251/1212